Designguide | Vindstabilt gadeskilt med vandfod - plakater

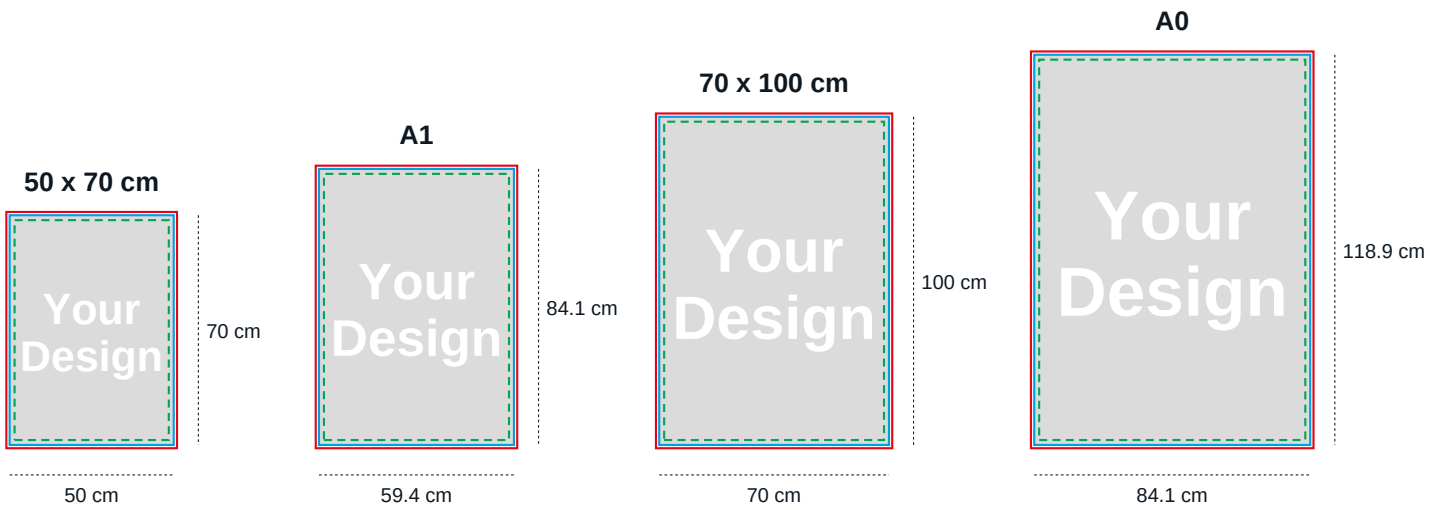

Bleed - 10 mm on all sides. Background colour/graphics must fill all of this area.

Final size - the print will be cut to this size.

Safety margin - 15 mm inside the final size. Keep important text and logos inside this area.

Printfile sizes (incl. bleed):

50 x 70 cm:	520 x 720 mm	(final size 500 x 700 mm, safety area 470 x 670 mm)
A1:	614 x 861 mm	(final size 594 x 841 mm, safety area 564 x 811 mm)
70 x 100 cm:	720 x 1020 mm	(final size 700 x 1000 mm, safety area 670 x 970 mm)
A0:	861 x 1209 mm	(final size 841 x 1189 mm, safety area 811 x 1159 mm)

File type: PDF (High Quality Print), one page per print/design.

Fonts and graphics: All fonts must be outlined. Logos must be vectorized.

Crop marks: Do not include crop marks or any other printing marks in the document.

Images: All images must be embedded. Resolution must be min. 150 dpi in 1:1.

Colours: Files should be prepared in CMYK (Fogra39 colour profile).

For rich black we recommend C: 30% M: 30% Y: 30% K: 100%.

Note: Double-sided signs: send one PDF page per side (or one file per side).

! Do not use this designguide as a template.
You can download templates under each of our products on our webshop.